No. P3A767

No. of contacts	A	B	C	D	E
60	28.70 (1.130)	28.50 (1.122)	18.415 (0.725)	22.10 (0.870)	21.70 (0.854)
⚠1 120	47.75 (1.880)	47.55 (1.872)	37.465 (1.475)	41.15 (1.620)	40.75 (1.604)
140	54.10 (2.130)	53.90 (2.122)	43.815 (1.725)	47.50 (1.870)	47.10 (1.854)

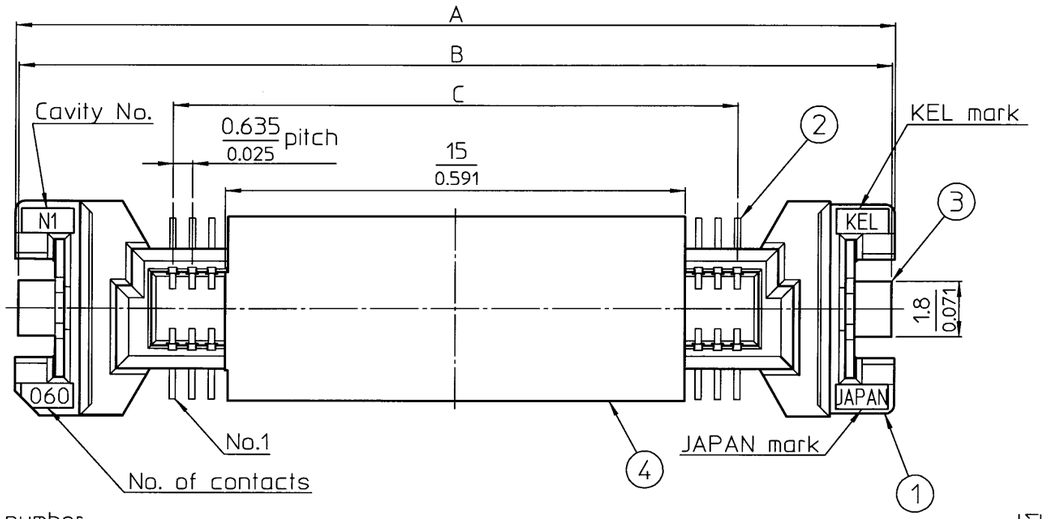

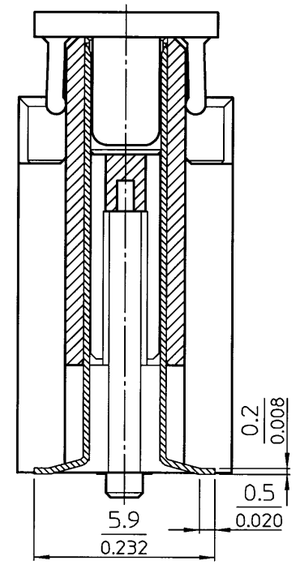

X-X' Cross-section

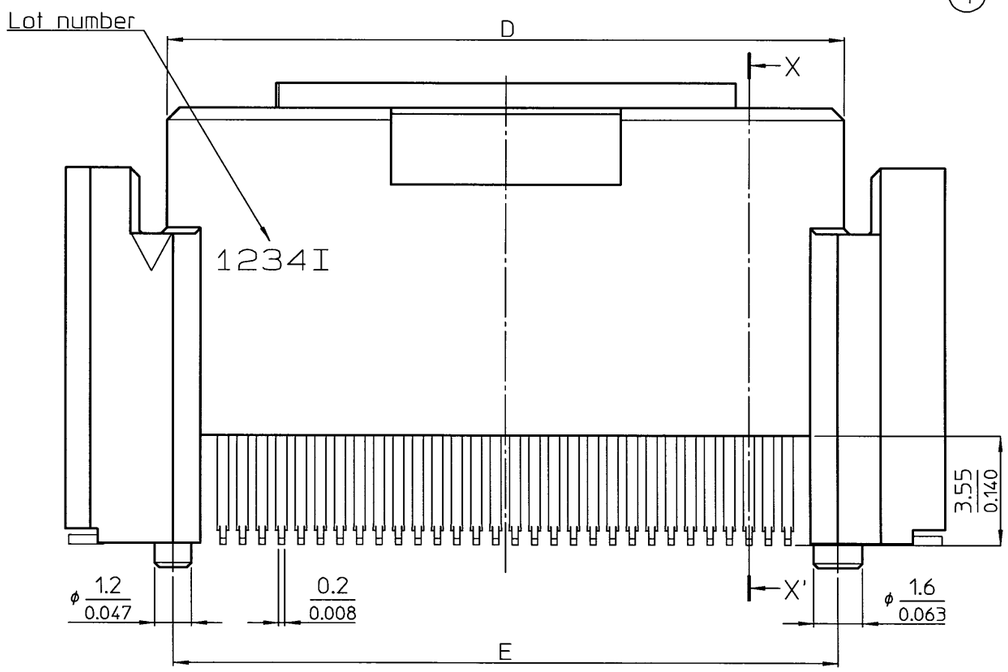

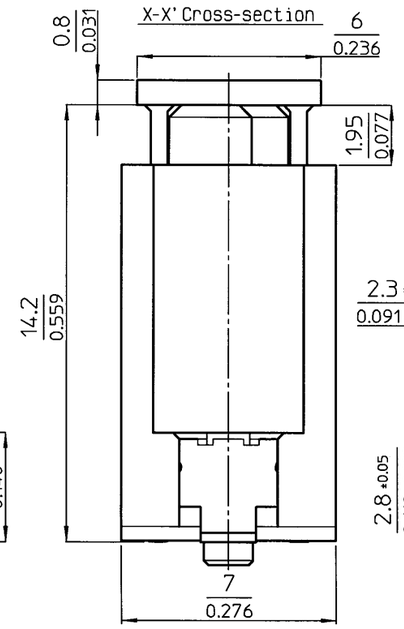

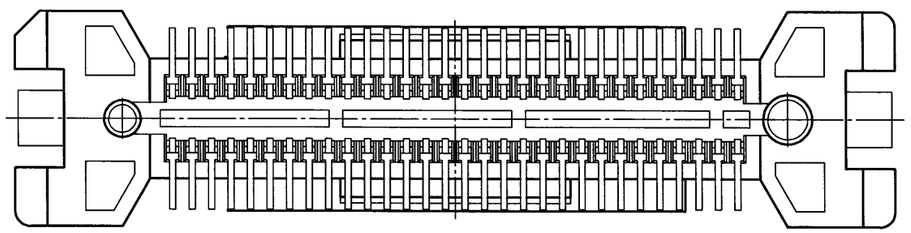

Notes
1)Dimensions are in millimeter.
2)Inch equivalents are in parenthesis or below the metric dimension.
3)Unless otherwise specified, tolerance shall be:
Less than 10 ±0.2 (Less than 0.394 ±0.0079)
10 ~ 50 ±0.25(0.394 ~ 1.969 ±0.0098)
50 or more ±0.3 (1.969 or more ±0.0118)
4)Contact finish.
Under plating Nickel
Contact area Au 0.05μm or more
Tails Au 0.03μm or more
5)SMT Retention Clip Finish.
Under plating Nickel
Gold plating 0.03μm or more
6)The product represented here is 60 contacts' version.
7)A reference drawing of P.W.B.

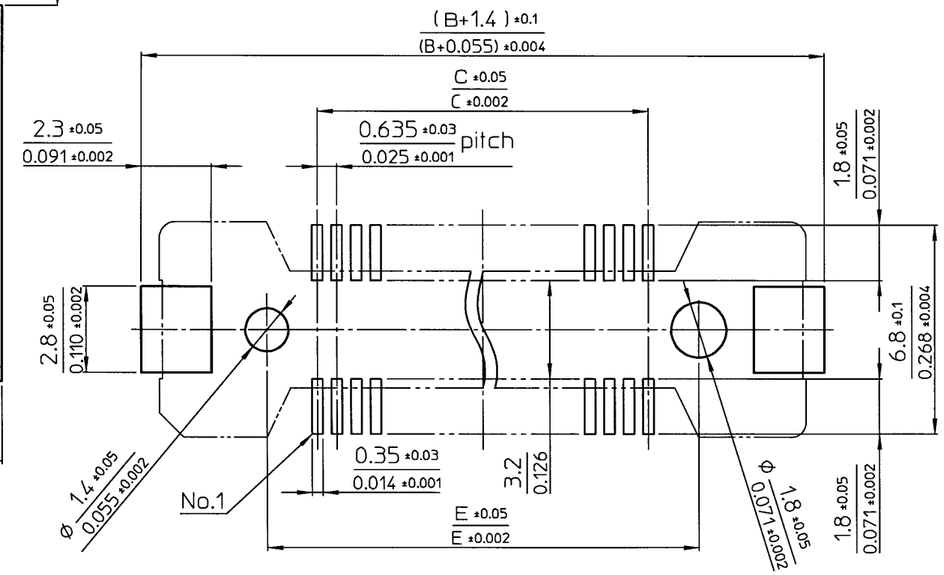

No.	Component	Quantity	Material	Finish
4	Pick up cover	1	Modified PA6T Glass-filled,UL94V-0,Natural	——
3	SMT Retention clip	2	Copper alloy	SEE NOTE5
2	Contact	No. of contacts	Copper alloy	SEE NOTE4
1	Insulator	1	LCP Glass-filled, UL94V-0, Black	——

REV.	DATE	APPROVED BY	DRAWN BY	DESCRIPTION
⚠4 ×				
⚠3 ×				
⚠2 ×				
⚠1 ×	1 Sep. 9,2015	N. Sugita	D. Yamashita	Added 120 pins.

THIRD ANGLE PROJECTION	DRAWN BY	DATE	CHECKED BY	DATE	APPROVED BY	DATE	SCALE	UNIT
	T.Morikami	Aug.20,2008	N.Sugita	Aug.20,2008	A.Shimada	Aug.21,2008	5:1	mm

MATERIAL

FINISH

TITLE: 8601-□□□FS-I-P

KEL CORPORATION

DRAWING No. P3A767

REVISION 1