Sep.1.2024 Copyright 2024 HIROSE ELECTRIC CO., LTD. All Rights Reserved.
In case of consideration for using Automotive equipment / device which demand high reliability, kindly contact our sales window correspondents.

Attachment : Unified screw thread 0-80UNF 1/4inch

NOTES
1. WHEN MATING THE CONNECTOR , PLEASE HOLD MILLING AREA OF 6.4±0.2 WITH A WRENCH.
2. 0-80UNF-2B SCREW TIGHTENING TORQUE IS 0.09 N・m. PLEASE TIGHTEN THE SCREWS EVENLY WHEN MOUNTING THE CONNECTORS TO ENSURE STABLE ELECTRICAL CONTACT.
3. PLEASE USE A PCB MOUNTING SCREW OF THE LENGTH OF L(mm).
THE LENGTH OF L(mm) IS PCB THICKNESS t1(mm) + SPRING WASHER THICKNESS t2(mm) + 1.8(mm).
PLEASE USE A SCREW WITH SPRING WASHER.
4. THE INDICATED DIMENSION IS THE CASE OF WHICH DIELECTRIC CONSTANT OF SUBSTRATE IS 3.35 AND THICKNESS IS t=0.2mm. LAND PATTERN LAYOUT DEPENDS ALSO ON ELECTRIC CONSTANT, THICKNESS AND LAYER CONSTRUCTION OF PCB. FOR BETTER PERFORMANCE, SIMULATION OF PCB WITH CONNECTOR IS RECOMMENDED.
5. RECOMMENDED PCB THICKNESS t1 IS GREATER THAN 1.0mm.
6. SIDE PLATING OF THE BOARD IS RECOMMENDED.
△4 7. THIS PRODUCT IS A SOLDERLESS CONNECTOR FOR PROTOTYPE EVALUATION OF HIGH SPEED TRANSMISSION BOARDS. IT IS NOT RECOMMENDED FOR USE IN ACTUAL COMMERCIAL EQUIPMENT.

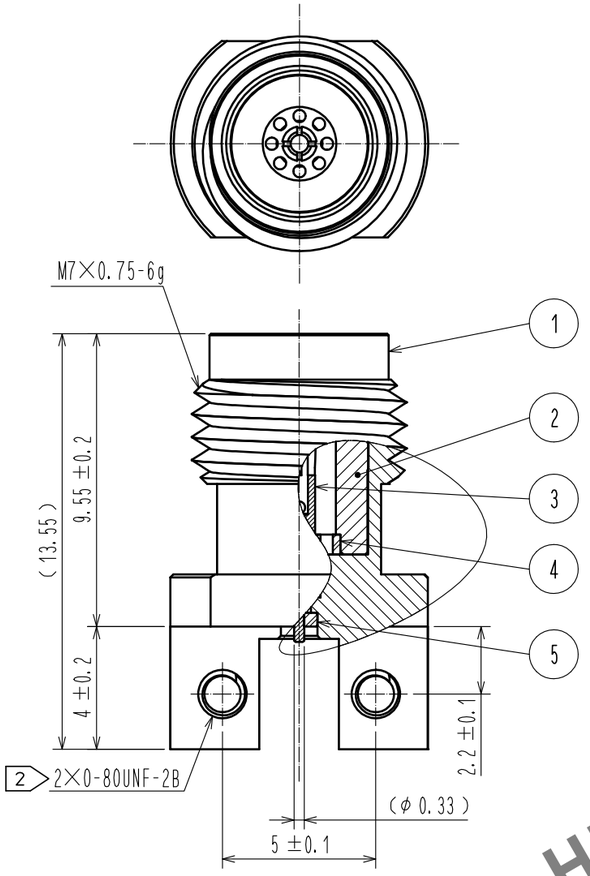

MARKING POSITION

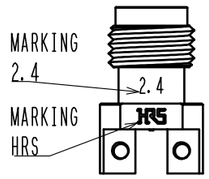

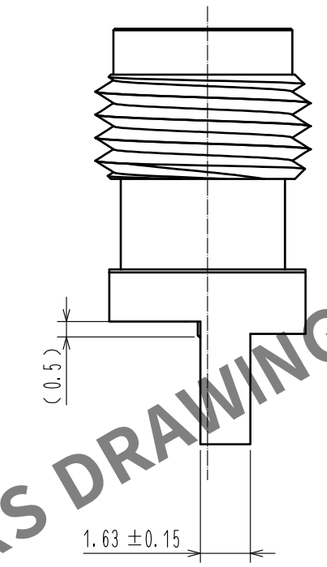

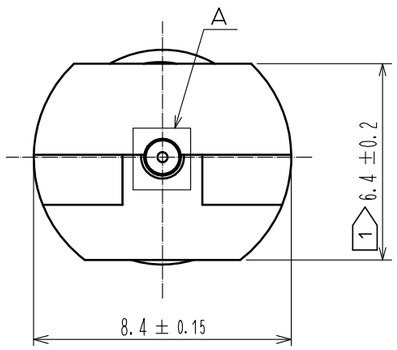

A(20 : 1)

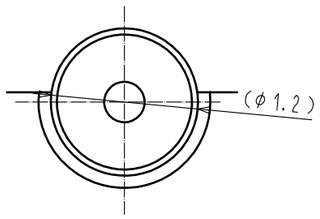

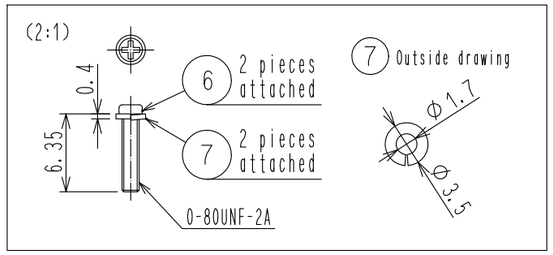

MOUNTING OF CONNECTOR
(1) WHEN THE CONNECTOR IS MOUNTED ON PCB. PLEASE DO NOT ALLOW A GAP BETWEEN THE EDGE OF PCB AND CONNECTOR.
(2) PLEASE MOUNT THE CONNECTOR AS LOCATED IN THE MIDDLE OF THE SIGNAL PAD OF PCB.

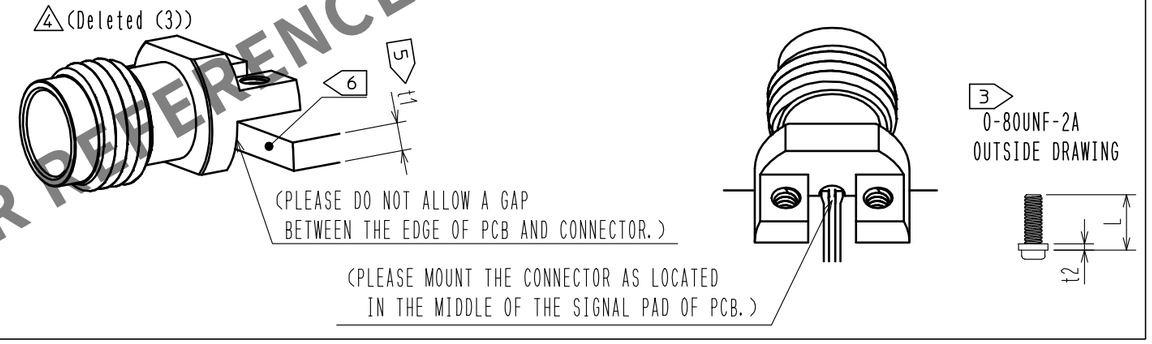

RECOMMENDED PC BOARD PATTERN DRAWING

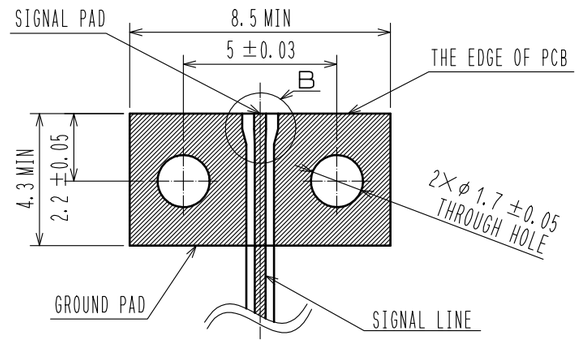

REGIST FOR SIGNAL PAD AND GROUND PAD IS PROHIBITED.

(DRAWING CHANGED)
B(10 : 1)

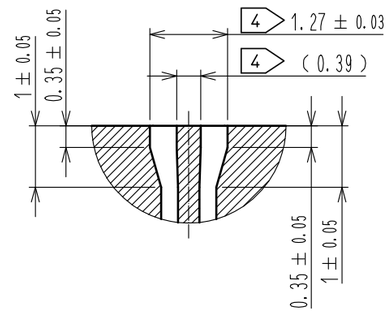

NO.	MATERIAL	FINISH , REMARKS	NO.	MATERIAL	FINISH , REMARKS
3	BERYLLIUM COPPER	GOLD PLATING	7	STAINLESS STEEL	Spring washer
2	STAINLESS STEEL	PASSIVATE	6	STEEL	0-80UNF-2A Screw
1	BRASS	NICKEL PLATING	5	POLYETHER IMIDE	
			4	POLYETHER IMIDE	

UNITS	SCALE		COUNT	DESCRIPTION OF REVISIONS	DESIGNED	CHECKED	DATE
mm	5 : 1	△4	2	DIS-D-00016641	TS. KANEKO	TS. NAKAGAWA	20230824

HRS HIROSE ELECTRIC CO., LTD.

APPROVED	: KH. IKEDA	20170123	DRAWING NO.	EDC-368795-11-00
CHECKED	: TS. NOBE	20170120	PART NO.	H2.4-LR-SR2(11)
DESIGNED	: TP. MATSUMOTO	20170120	CODE NO.	CL0338-0603-0-11 △4 1/1
DRAWN	: TP. MATSUMOTO	20170120		

HRS DRAWING FOR REFERENCE