Sep.1.2024 Copyright 2024 HIROSE ELECTRIC CO., LTD. All Rights Reserved.
In case of consideration for using Automotive equipment / device which demand high reliability, kindly contact our sales window correspondents.

ASSEMBLY TOOL: APPLICABLE OUTER CONDUCTOR CRIMPING TOOL HT303/HRM-T-4(58A/U HOLE)

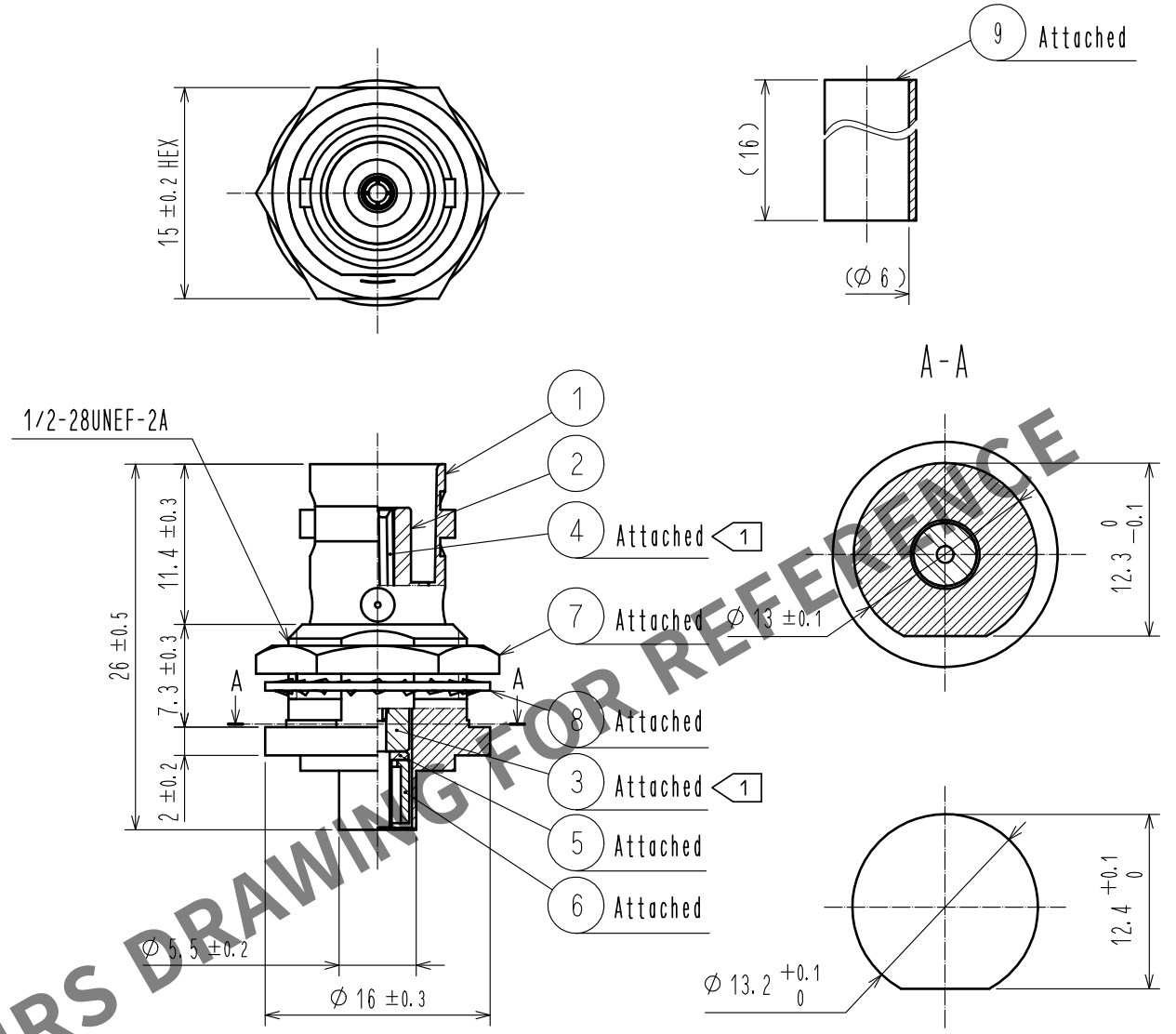

PANEL CUTOUT
(RECOMMENDED PANEL THICKNESS : 1.2~4.1)

HRS DRAWING FOR REFERENCE

NOTE 1 PART NUMBERS ③, ④ ARE ATTACHED AS ONE BLOCK.

NO.	MATERIAL	FINISH . REMARKS	NO.	MATERIAL	FINISH . REMARKS
5	BRASS	NICKEL PLATING			
4	BERYLLIUM COPPER	GOLD PLATING	9	POLYOLEFIN	HEAT SHRINK TUBING
3	PTFE		8	STEEL	NICKEL PLATING
2	PTFE		7	BRASS	NICKEL PLATING
1	BRASS	NICKEL PLATING	6	BRASS	NICKEL PLATING

UNITS mm	SCALE 2 : 1	COUNT	DESCRIPTION OF REVISIONS	DESIGNED	CHECKED	DATE
		0				

HIROSE ELECTRIC CO., LTD.

APPROVED	NK. NINOMIYA	20211115
CHECKED	NK. NINOMIYA	20211115
DESIGNED	MT. KANEKO	20211112
DRAWN	NK. OOSHIMA	20211112

DRAWING NO.	EDC-136780-40-00
PART NO.	BNC-BPJ-1.5DV(40)
CODE NO.	CL0302-0393-2-40

0 1/1

FORM HC0011-5-51