THIS DRAWING IS UNPUBLISHED RELEASED FOR PUBLICATION 2015
© COPYRIGHT 2015 BY TE CONNECTIVITY ALL RIGHTS RESERVED.

LOC	DIST
-	-

REVISIONS

P	LTR	DESCRIPTION	DATE	DWN	APVD
	NC	NEW RELEASE PER E.O. P20735	23DEC2010	-	RDR
	A	REVISED PER ECO-15-001798	19MAR2015	PV	DM
	A1	REVISED PER PCN E-20-000705	28JAN2020	PK	DM
	A2	REVISED PER PCN E-21-000055	13JAN2021	CO	IG

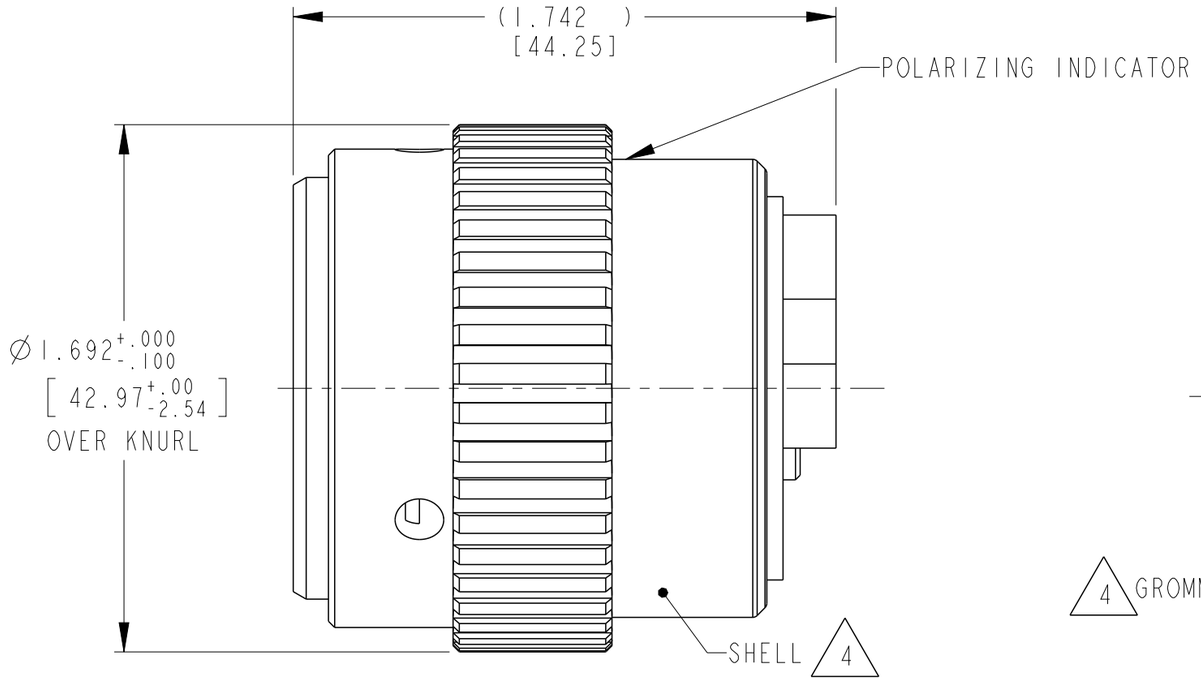

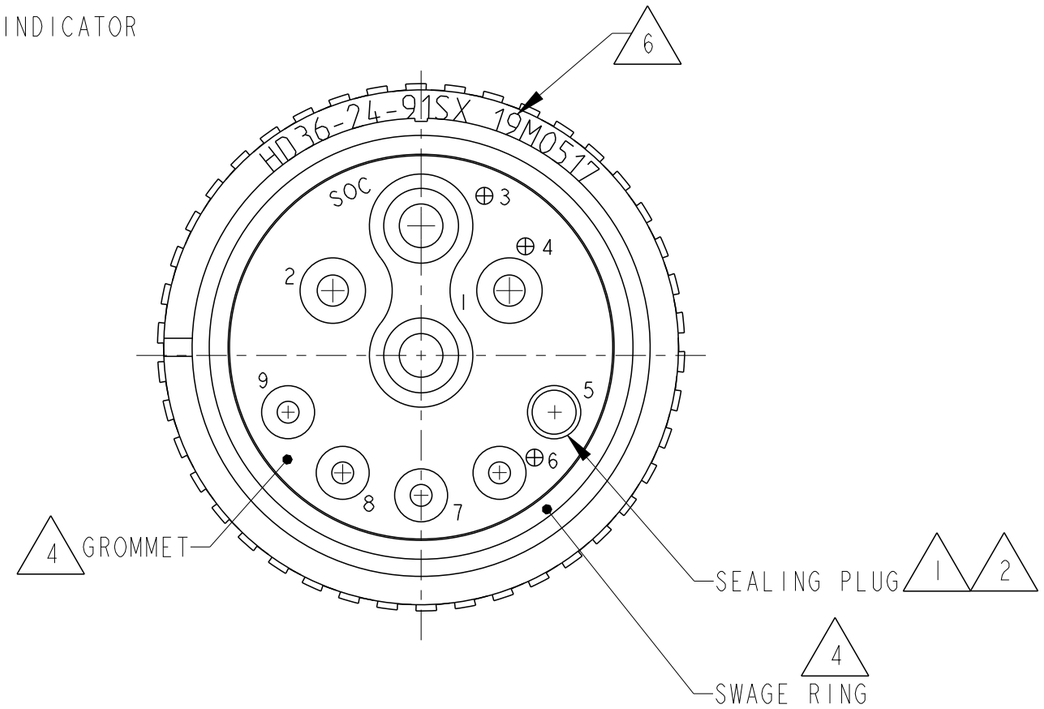

6 DATE CODE: IDENTIFIES THE YEAR,MONTH,DAY AND HOUR OF ASSEMBLY.
YEAR: FIRST AND SECOND DIGITS. (14=2014)
MONTH: THIRD DIGIT,EXCLUDING I.A=JAN.,B=FEB.,C=MARCH...(K=OCT.)
DAY: FOURTH AND FIFTH DIGITS (14=14th DAY)
HOUR: SIXTH AND SEVENTH DIGITS (11=11AM)

5 MATERIAL:
PLUG HOUSING: 6061-T6 ALUMINUM ALLOY
ADAPTER: 6061-T6 ALUMINUM ALLOY
GROMMET: SILICONE VMQ (RED),
RETAINER RING: PA66 GF10.

4. THIS PLUG MATES WITHFOLLOWING RECEPTACLE
HD34-24-9IPX-XXXX
(X = SEAL TYPE, XXXX = ALL MODIFICATIONS) AND HDBOX24-9IPX.

3 CAVITY 5 IS WITH CONTACT SIZE 16 AND THE GROMMET IS SEALED.

2 CONTACTS 4 AND 5 ARE INTERNALLY CONNECTED (BUILT-IN BRIDGE)

1. CONSULT THE FACTORY FOR ELECTRICAL AND MATERIAL SPECIFICATIONS.

NOTES:

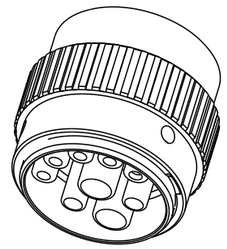

3D VIEW

THIS DRAWING IS A CONTROLLED DOCUMENT.

DIMENSIONS: INCHES[mm]

TOLERANCES UNLESS OTHERWISE SPECIFIED:
0 PLC ±-
1 PLC ±-
2 PLC ±-
3 PLC ±.010 [±.254]
4 PLC ±-
ANGLES ±0° 30′0″

MATERIAL 5

FINISH -

DWN 10DEC2010 I. GRANTCHAROVA
CHK 23DEC2010 B. BAYFORD
APVD 13DEC2010 S. BEARD
PRODUCT SPEC 108-151014
APPLICATION SPEC 114-151014
WEIGHT 69g

Customer Drawing

TE Connectivity

NAME PLUG CONNECTOR 24-91 ARR. HD SERIES

SIZE	CAGE CODE	DRAWING NO	RESTRICTED TO
A3	-	C-HD36-24-9ISX	-

SCALE NONE SHEET 1 OF 1 REV A2

1470-19 (3/11)