Aug.1.2024 Copyright 2024 HIROSE ELECTRIC CO., LTD. All Rights Reserved.
In case of consideration for using Automotive equipment / device which demand high reliability, kindly contact our sales window correspondents.

Metric screw thread type

NOTES
1. WHEN THE MATING CONNECTOR, PLEASE HOLD MILLING AREA OF 8±0.2 WITH A WRENCH.
2. M2×0.4 SCREW TIGHTENING TORQUE IS 0.18 N・m
PLEASE TIGHTEN THE SCREWS EVENLY WHEN MOUNTING THE CONNECTORS TO ENSURE STABLE ELECTRICAL CONTACT.
3. PLEASE USE A PCB MOUNTING SCREW OF THE LENGTH OF L(mm).
THE LENGTH OF L(mm) IS PCB THICKNESS t1(mm) + SPRING WASHER THICKNESS t2(mm) + 2(mm).
PLEASE USE A SCREW WITH SPRING WASHER.
△3 4. THIS PRODUCT IS A SOLDERLESS MOUNTED CONNECTOR FOR PROTOTYPE EVALUATION OF HIGH SPEED TRANSMISSION BOARDS.
IT IS NOT RECOMMENDED FOR USE IN ACTUAL COMMERCIAL EQUIPMET.

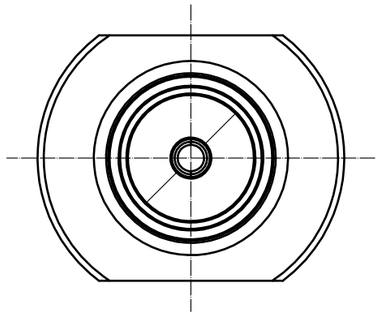

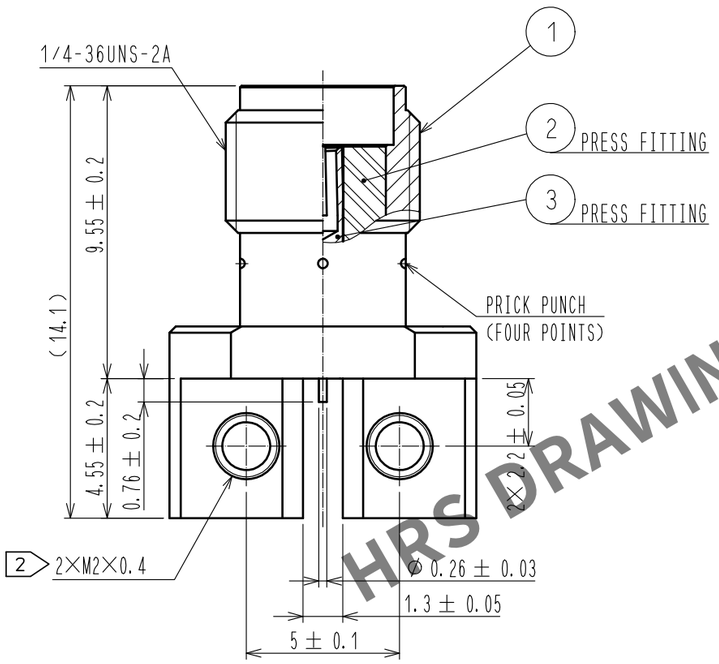

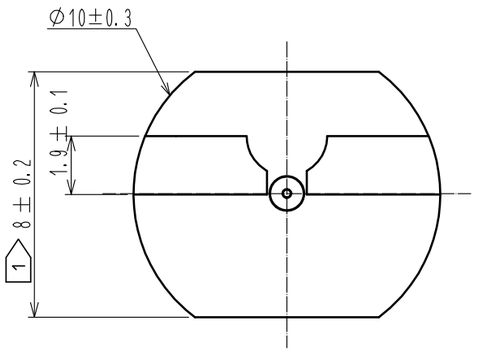

MOUNTING OF CONNECTOR
(1) WHEN THE CONNECTOR IS MOUNTED ON PCB, PLEASE DO NOT BE A GAP BETWEEN THE EDGE OF PCB AND CONNECTOR.
(2) PLEASE MOUNT THE CONNECTOR AS LOCATED IN THE MIDDLE OF THE SIGNAL PAD OF PCB.
△3 (DELETED ARTICLE.)

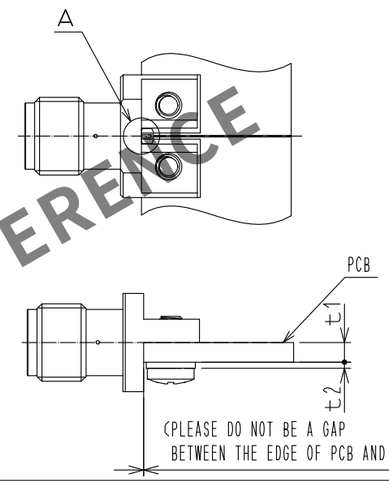

A(10:1)

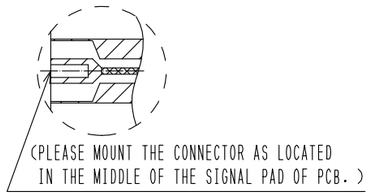

3 M2×0.4 SCREW OUTSIDE DRAWING

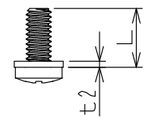

RECOMMENDED PC BOARD PATTERN DRAWING(4:1)

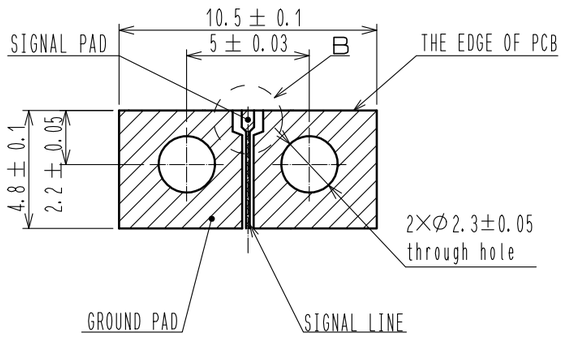

B(10:1)

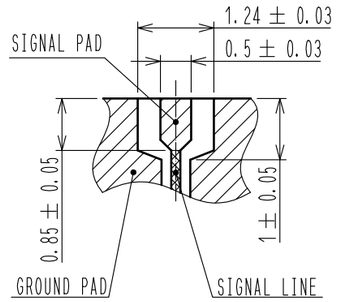

PLEASE DESIGN THE SIGNAL PAD AND SIGNAL LINE WITH 50 Ω.
REGIST FOR SIGNAL PAD AND GROUND PAD IS PROHIBITED.

RoHS COMPLIANT

NO.	MATERIAL	FINISH , REMARKS	NO.	MATERIAL	FINISH , REMARKS
2	PTFE				
1	BRASS	GOLD PLATING	3	BERYLLIUM COPPER	GOLD PLATING

UNITS	SCALE		COUNT	DESCRIPTION OF REVISIONS	DESIGNED	CHECKED	DATE
mm	5 : 1	△3	2	DIS-D-00016447	NM. TORIUMI	TS. KANEKO	20230803

HRS HIROSE ELECTRIC CO., LTD.

APPROVED	: KY. SHIMIZU	20150117	DRAWING NO.	EDC-339102-00-00
CHECKED	: KY. SHIMIZU	20150117	PART NO.	HRM(G)-300-467B-2
DESIGNED	: RO. YOKOYAMA	20150117	CODE NO.	CL0323-0923-5-00 △3 1/1
DRAWN	: RO. YOKOYAMA	20150117		

HRS DRAWING FOR REFERENCE