⑥ **USB 2.0 COMPLIANT**
Waterproof rating: IP67

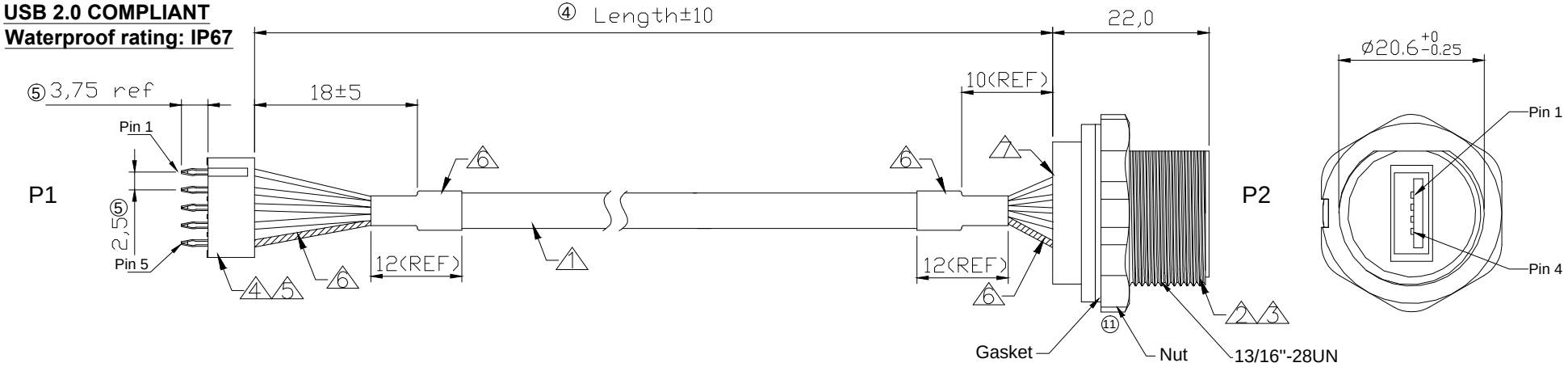

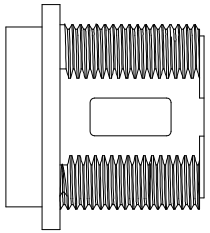

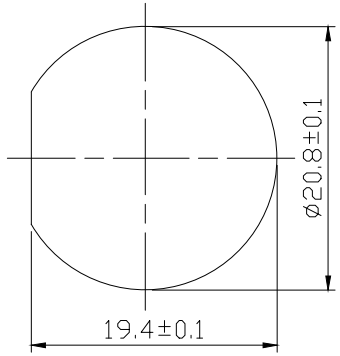

Recommended Panel Cut-Out

RoHS compliant
Unit: mm

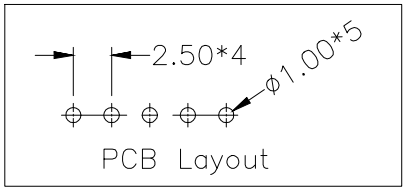

⑩ Testing Conditions:
1. Voltage: 300V DC/0.01;
2. Insulation Resistance: 10 Mohms min;
3. Conductive Resistance: 5 Ohms max;
4. 100% open and short electrical test;
⑧ 5. Operate Temperature: -20°C~+80°C;
⑨ 6. The Current Rating: 1.5A;
⑪ 7. Recommended use torque force: 1.0Nm Max.

④	WSW P/N	Length
	A-USB-APFS	50 mm
⑩	A-USB-APFS-100	100 mm
	A-USB-APFS-150	150 mm
	A-USB-APFS-200	200 mm
⑦	A-USB-APFS-250	250 mm

WIRE LIST

P1	PAIR	COLOR	P2
1		RED(24AWG)	1
2		WHITE(28AWG)	2
3		GREEN(28AWG)	3
4		BLACK(24AWG)	4
5		DRAIN	SHELL

⑥ ITEM	SPECIFICATION	Q'TY	UNIT
7	Black glue A/B (ethoxyline resin)	3	g
6	BLACK HEAT SHRINKABLE CASING	4	PCS
5	TERMINAL:PHOSPHOR BRONZE. TIN-PLATED CJT:B2512-T ⑫	5	PCS
4	HOUSING: PH2.5MM 5PIN CJT:B2512H-5P ⑫	1	PCS
3	ABS 94V-0. BLACK 13/16"-28UN SHELLED	1	SET
2	USB A/M CONNERTOR SOLDER	1	PCS
⑦ 1	USB 2.0 28AWG*1P+24AWG*2C+AL.MY+D+B UL2725 JACKET BLACK PVC OD=5.0±0.2mm (UV RESISTANT)	1	PCS

Scale	Free
TOLERANCE	
±0.5	

Id.	Modification	Date	Name
⑫	Change the MPN of P1 end	05.07.2024	Luca
⑪	Update the nut and notes	07.12.2020	Segal
⑩	Cancel "A" logo and add new P/N version	10.08.2018	Segal
⑨	Add current rating information	08.08.2018	Segal
⑧	Add operate temperature	06.08.2018	Amy
⑦	Update	18.07.2018	Xavier

	Date	Name
Drawn	20.08.2004	Hellwig
Approved	05.07.2024	Luca

ASSMANN wsw components

Customer-No.

ASSMANN WSW-No. ④⑦
A-USB-APFS
A-USB-APFS-xxx

Drawing-No. ASS 1576 CA rev12

Replace | Sheet

SV2758