Aug.1.2024 Copyright 2024 HIROSE ELECTRIC CO., LTD. All Rights Reserved.
In case of consideration for using Automotive equipment / device which demand high reliability, kindly contact our sales window correspondents.

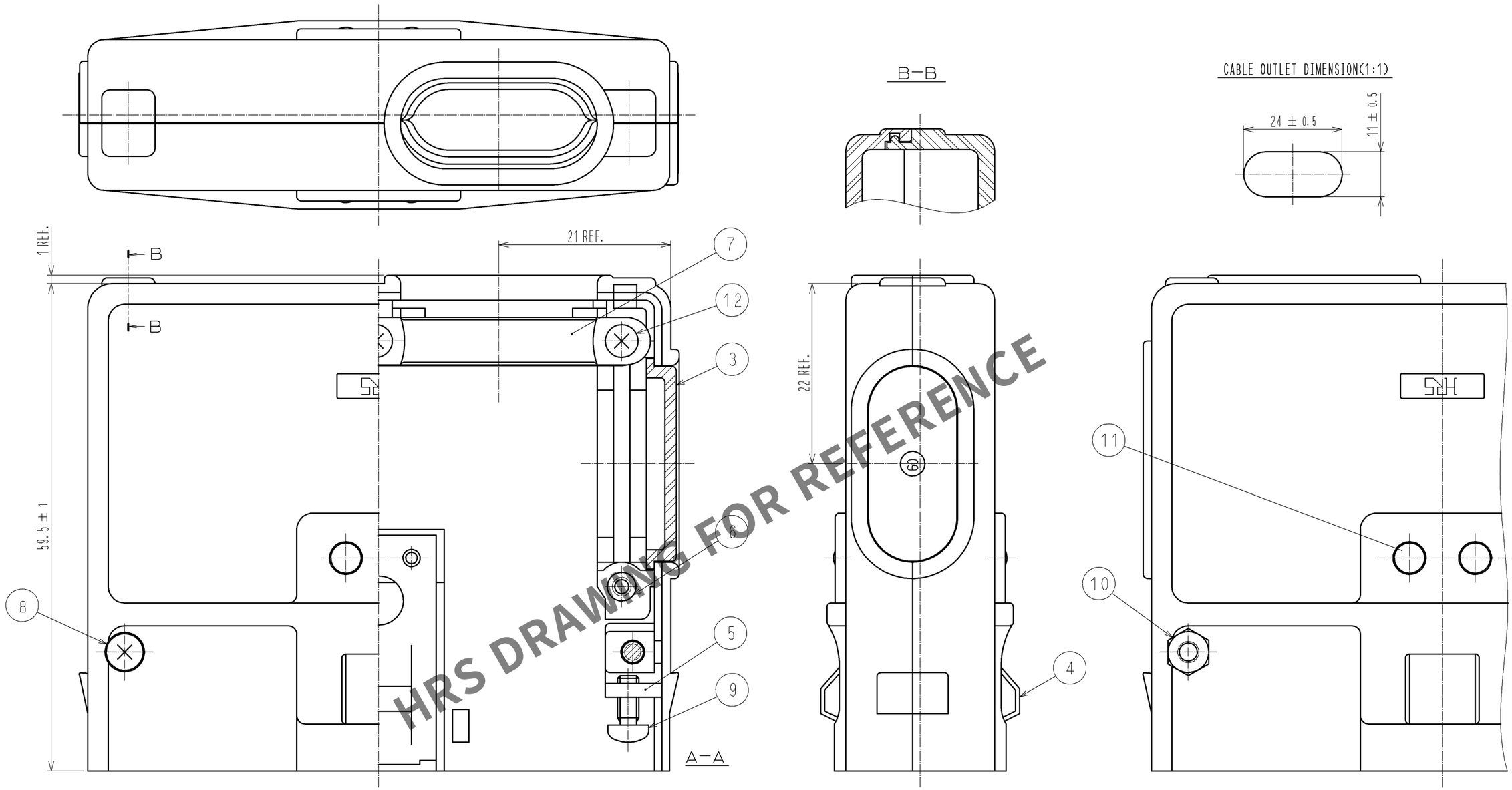


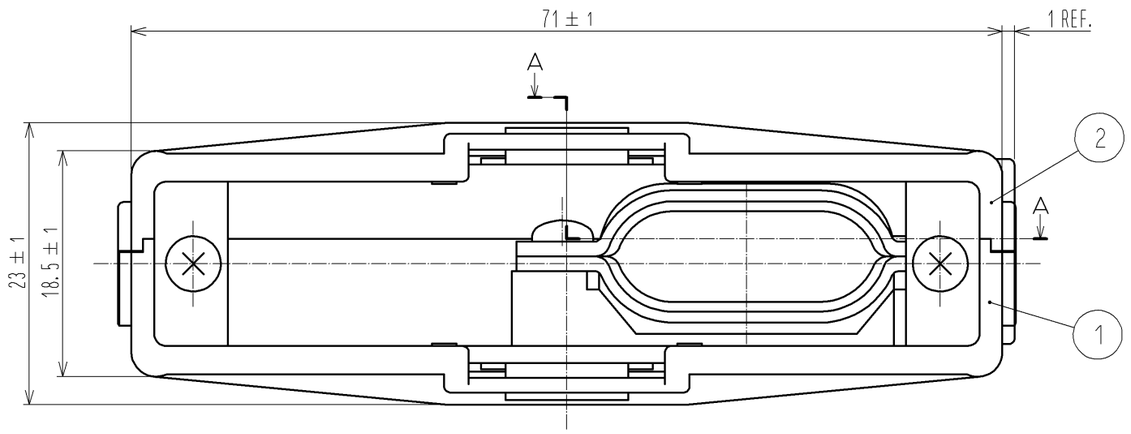


| NO. | MATERIAL | FINISH , REMARKS | NO. | MATERIAL | FINISH , REMARKS |
|---|---|---|---|---|---|
| 7 | STAINLESS STEEL | | | | |
| 6 | BRASS | NICKEL PLATING 0.8μm MIN | 11 | ALUMINUM ALLOY | |
| 5 | STEEL | OVER:NICKEL PLATING 2μm MIN<br>UNDER:COPPER PLATING 1μm MIN | 10 | STEEL | OVER:NICKEL PLATING 0.8μm MIN<br>UNDER:COPPER PLATING 2μm MIN<br>HEX NUT M2.6×0.45 |
| 4 | PHOSPHOR BRONZE | NICKEL PLATING 3μm MIN | 9 | STEEL | OVER:NICKEL PLATING 2μm MIN<br>UNDER:COPPER PLATING 1μm MIN<br>CROSS PAN HEAD MACHINE SCREW M2.6×0.45×6 |
| 3 | ABS | BLACK, UL94HB | | | |
| 2 | ABS | SELECTIVE MATTE FINISH, BLACK, UL94HB | 8 | STEEL | OVER:NICKEL PLATING 2μm MIN<br>UNDER:COPPER PLATING 1μm MIN<br>CROSS PAN HEAD MACHINE SCREW M2.6×0.45×14 |
| 1 | ABS | SELECTIVE MATTE FINISH, BLACK, UL94HB | | | |

| UNITS | SCALE | COUNT | DESCRIPTION OF REVISIONS | DESIGNED | CHECKED | DATE |
|---|---|---|---|---|---|---|
| mm | 2 : 1 | | | | | |

HIROSE ELECTRIC CO., LTD.

| | | | | |
|---|---|---|---|---|
| APPROVED | : NM. NISHIMATSU | 14. 07. 04 | DRAWING NO. | EDC3-005686-01 |
| CHECKED | : NM. NISHIMATSU | 14. 07. 04 | PART NO. | P-1660A-C(50) |
| DESIGNED | : MO. SHIMOYAMA | 14. 07. 03 | CODE NO. | CL216-0036-0-50 |
| DRAWN | : MO. SHIMOYAMA | 14. 07. 03 | | 1/1 |

FORM HC0011-5-7